CONDENSING BOILER + INSTANTANIOUS HOT WATER

spares & parts online
IBASIS.co.uk©

Saunier Duval

Instructions for use
Installation and servicing

Thema
CONDENS

Thema CONDENS F 18 E SB
Thema CONDENS F 24 E
Thema CONDENS F 30 E

Index

1 General points 2

2 Documents 2

3 Safety 2

3.1 Gas Leak or Fault 2

3.2 Safety regulations and recommendations 2

4 Guarantee / Responsibility 3

5 Appliance use 4

6 Servicing 4

7 Recycling 4

8 Appliance use: Thema Condens 6

8.1 Control panel 6

8.2 LCD display 6

8.3 Operating and lighting 6

8.4 Temperature adjustment 7

8.5 Time setting 7

8.6 Timed central heating setting 7

8.7 «Boost» function 7

9 Appliance use: Thema Condens SB 8

9.1 Control panel 8

9.2 LCD display 8

9.3 Operating and lighting 8

9.4 Heating temperature adjustment 9

10 Turn the boiler off 9

11 Fault finding 9

12 Frost protection 10

12.1 Boiler frost protection 10

12.2 Installation frost protection 10

13 Maintenance/After Sales Service 10

1 General points

The Thema CONDENS boiler is an appliance that uses condensing technology, which recovers heat present in waste gas.
Thanks to this operating principle, the boiler consumes less energy and decreases NOx and CO2 emissions.

The Thema CONDENS boiler has a double use (heating + instantanious hot water).

This appliance of the room-sealed type is equipped with a flue exhaust and air intake for combustion products called the flue system. This flue principle offers the possibility to install the appliance in any room and with no specific ventilation requirements.

The installation and the commissioning of the appliance has to be carried out by a skilled professional who is responsible for the compliance of the installation and the commissioning according to current regulations.

You also have to call on a skilled professional for the maintenance and repairing of the appliance as well as for any gas adjustment.

Saunier Duval has specially designed different accessories for your appliance depending on your installation.

If you want a detailed list, please contact your supplier or visit our website www.saunier-duval.co.uk.

2 Documents

- Please keep this manual as well as any documents enclosed with it safe for future reference.

We accept no liability in case of damage due to non-compliance of the instructions of the present manual.

3 Safety

3.1 Gas Leak or Fault

- Do not switch on nor switch off the light.
- Do not activate the electrical switch.
- Do not use the phone in this risky area.
- Do not light up a flame (for example, a lighter or a match).
- Do not smoke.
- Turn off the gas emergency control valve immediatly.
- Open all windows and doors to ventilate the area.
- Warn any person in the house.
- Inform the Gas Utility company or a skilled professional.

3.2 Safety regulations and recommendations

Please observe the following safety regulations and recommendations:

- Do not use any aerosols, solvents, abrasive cleaner, detergents with chlorine, paint, glue, etc. near the appliance. Under unfavourable conditions, these substances can be very corrosive even for the flue.
- Do not use or store any explosive material or easily flammable (for example, petrol, paint, etc.) in the room where the appliance is situated.
- Never switch off the safety devices and do not try to adjust these devices as this could lead to a malfunction.

- Do not change:
  - The appliance,
  - The appliance environment,
  - Water, air, gas and electric supply,
  - Flue system.
- Never carry out by yourself maintenance or repair on the appliance.
- In case of a water leakage, immediately close the cold water inlet of the appliance and call a skilled professional to repair the leak.
- Do not break sealed mechanisms.
- Do not modify the technical conditions close to the appliance, as these are very important as far as the appliance safety is concerned.
  For example: the minimum clearances of the external sides.

Warning!
A heating safety valve with a discharge pipe is fitted to this appliance. The valve must not be touched except by a skilled professional.

- If the valve discharges at any time, switch the appliance off and isolate it from the electrical supply.

Warning!
We advise you to be very careful when adjusting hot water temperature: water can be very hot when releasing from the draw off tap.

4 Guarantee / Responsibility

Your appliance is guaranteed for a period of 24 months from the date of installation or 30 months from the date of manufacture whichever is the shorter and covers manufacturing defects only.

We, Saunier Duval, undertake to repair or replace parts free of charge which are recognised by us to be of faulty manufacture - if necessary after return to our factory for examination - on condition that:

- The appliance was installed by a qualifled gas installer in accordance with installation instructions, and all the relevant codes of practice, standards and legislation in force.
- The appliance has been used for normal domestic purposes and in accordance with the manufacturer's operating and maintenance instructions.
- The appliance has not been serviced, maintained, repaired dismantled or tampered with during the guarantee period, by anyone other than a competent person.
- The repair or replacement of parts during the guarantee period does not have the effect of extending the period.

This guarantee does not cover:

- Any defects or damage resulting from incorrect or poor installation, inadequate servicing, or maladjustment of the gas or water used.
- Any defects in the system to which the appliance is connected.
- Any deterioration or maladjustment following changes in the nature or pressure of the gas or the water used, or a change in the characteristics of the electrical supply voltage.

Notification of any fault should be made to the appliance installer. No repairs should be undertaken upon the appliance, intending it to be covered by the product guarantee without prior authorisation from Saunier Duval.
IMPORTANT: The appliance serial number must be quoted on all correspondence/ contact made with Saunier Duval.

This guarantee is in addition to your statutory and other legal rights, which will not be excluded or diminished by the return of the guarantee registration card.

5 Appliance use

Saunier Duval's appliances are manufactured according to the latest technical evolutions and current safety regulations.

This appliance is used to produce hot water using gas. Any other use is considered as inappropriate and is forbidden.

The manufacturer shall not be responsible for any damage caused by another use. In that case the user shall be the responsible.

6 Servicing

- Clean the case of the appliance with wet soapy cloth.
- Do not use any abrasive cleaning product as they could damage the housing or plastic parts.

7 Recycling

The appliance comprises of many recyclable parts. The packaging, the appliance and the content of the package shall not be thrown together with domestic waste but disposed of according to the current regulations.

8 Appliance use: Thema Condens

8.1 Control panel

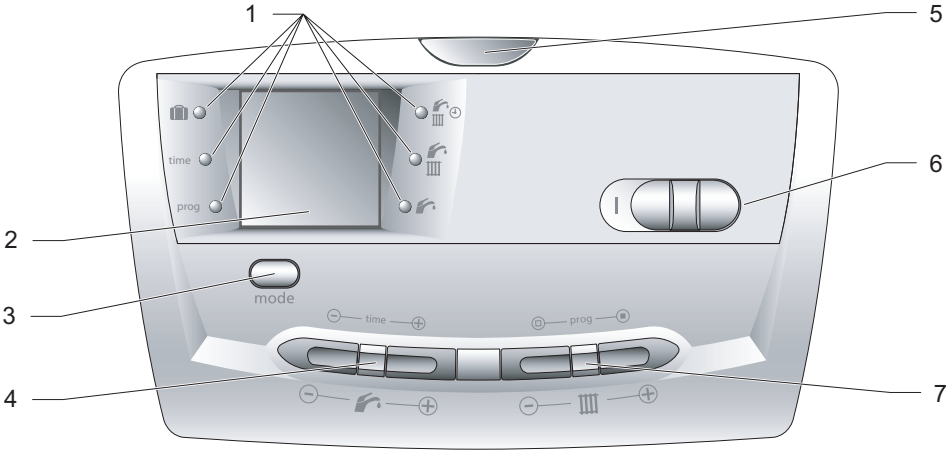

Legend

1 Operating mode indicators
2 LCD display
3 Operating mode selection
4 DHW temperature adjustment
5 Operating indicator
6 On/off switch
7 Heating temperature adjustment

8.2 LCD display

Legend

1 Program period of heating on
2 Time display
3 Multimode display
4 Program period of heating off

8.3 Operating and lighting

- Make sure that:
  - The boiler is connected to the electrical supply.
  - The gas service cock is open.
- Push switch (6) until the “I” symbol appears. The display and operational mode indicator light up.

Multimode display (3):

- heating circuit pressure (bar)
- or water temperature in the heating circuit when heating is on (°C)
- or a fault code

Operating indicator:

- Yellow display: flame presence
- Flashing red: fault

- Push “MODE” to modify the operating mode of the boiler. The green LED indicates the selected mode.

	Domestic hot water + Timed central heating
	Central heating and domestic hot water
	Domestic hot water only
	Appliance frost protection
time	Time setting
prog	Heating program setting

8.4 Temperature adjustment

8.4.1 Domestic hot water temperature adjustment

- Push + or – on the side to change domestic hot water temperature.
  The ECO symbol remains until 49°C.

8.4.2 Heating temperature adjustment

- Push + or – on the side to change water temperature in the heating circuit.

Observation: a quick push on +/- or / side displays the temperature value previously selected.

8.5 Time setting

- Press on the MODE key until the green indicator is in the position in front of the “time” mode.
  The hour section starts flashing.
- Use the + or – keys on the “time” side to set present hour, then press MODE key to validate.
  The minute section starts flashing.
- Use the + or – keys on the “time” side to set minutes, then press MODE key to validate.

8.6 Timed central heating setting

- Press the MODE key until the green indicator is in front of the “prog” mode.
- Use the ■ key on the “prog” side to select on periods. A black square appears on the display each time the key is pressed.
- Use the □ key on the “prog” side to program off periods.

Each press on the ■ and □ keys corresponds to a 30 minute time period.

- Press on the + and - keys on the “time” side to move through the program without modifying it.
- Press on the MODE key to validate your heating program.

8.7 «Boost» function

The “boost” function over rides the program to advance the heating during periods when the program is off. This function remains active until the next new period of heating is reached.

This function can only be activated in the “Domestic hot water + timed central heating” operating mode.

- Press on the ■ key on the “prog” side for 5 seconds in order to activate the “Boost” function.

The activated segments of the heating program will then flash for 5 seconds.

- Press on the ■ key on the “prog” side for 5 seconds to deactivate the “Boost” function.

9 Appliance use: Thema Condens SB

9.1 Control panel

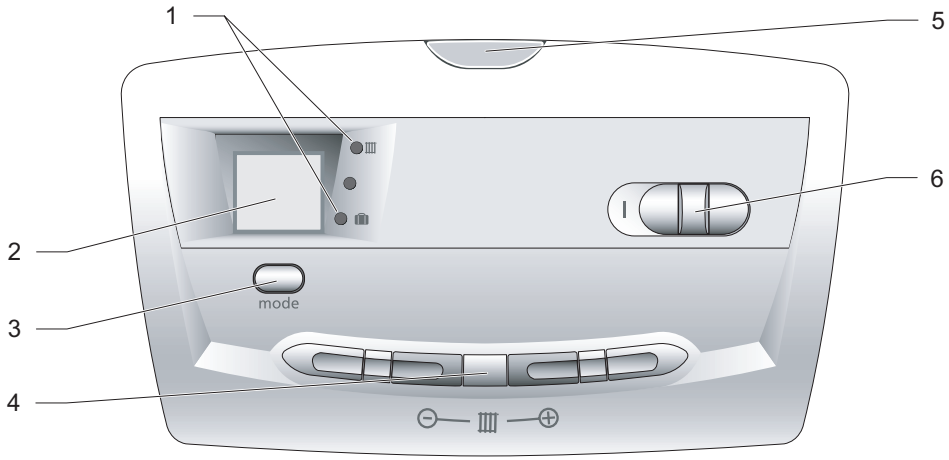

Legend

1 Operating mode indicators
2 LCD display
3 Operating mode selection
4 Heating temperature adjustment
5 Operating indicator
6 On/off switch

9.2 LCD display

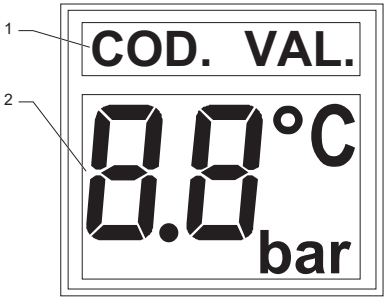

Legend

1 Installer menu
2 Multimode display

9.3 Operating and lighting

- Make sure that:
  - The boiler is connected to the electrical supply.
  - The gas service cock is open.
- Push switch (6) until the “I” symbol appears. The display and operational mode indicator light up.

Multimode display (2):

- heating circuit pressure (bar)
- or water temperature in the heating circuit when heating is on (°C)
- or a fault code.

Operating indicator:

- Yellow display: flame presence
- Flashing red: fault

- Push “MODE” to modify the operating mode of the boiler. The green LED indicates the selected mode.

	Central heating
	Appliance frost protection

9.4 Heating temperature adjustment

- Push + or – to change water temperature in the heating circuit.

Observation:
A quick push on +/- displays the temperature value previously selected.

10 Turn the boiler off

- Push switch (6) until the “O” symbol appears.

  The appliance is no longer supplied with electric power.

We advise you to turn off the appliance gas supply if you leave home for a long period.

11 Fault finding

When a fault occurs, the operating indicator flashes red and the display shows a fault code, symbolized by the letter F followed by a number, for example F1. As a user, you can act only in the following cases. If other codes appear than those listed in the following table, you must contact a skilled professional.

Warning !
Never try to service or repair the appliance by yourself and only start the appliance once a skilled professional has repaired the fault.

Fault code	Cause	Corrective action
The LCD display is off.	Power failure	Check the mains power supply is on and that the appliance is switched on at the spur or socket. The appliance starts automatically once the power supply is on. If the fault persists, please contact a skilled professional.
F1 or F4	Ignition fault	Switch off the boiler Wait 5 seconds and then start the boiler again. If the fault continues, please contact a skilled professional.
F2	Air flow failure	The safety system shuts off the appliance. Please contact a skilled professionnal
F5	Overheating fault	Please contact a skilled professionnal
The operating and pressure indicator flashes	Insufficient water pressure in the system (<0.5 bar)	Open the 2 blue taps situated under the boiler simultaneously until you obtain a pressure between 1 and 2 bars on the indicator. If you have to fill often this might be caused by a leak in your appliance or system. In this case, contact a skilled professional to check the boiler and system.
	Other defects	Please contact a skilled professionnal

12 Frost protection

12.1 Boiler frost protection

In case of frost risk, do as follows:

- Make sure the boiler is supplied with electrical power and gas.
- Select the operating mode on the control panel.

The frost protection system orders the pump to start as soon as the temperature in the heating circuit falls below 8°C. The pump stops as soon as the temperature of the water contained in the heating circuit reaches 10°C.
If the temperature in the heating system falls below 5°C, the burner ignites until it reaches 35°C.

12.2 Installation frost protection

- If you leave home for a few days, select the minimum heating temperature on the control panel of the boiler and just decrease the setpoint temperature on your room thermostat.
- If you leave home for a long period, see chapter “Draining of the appliance” in the installation manual.

13 Maintenance/After Sales Service

Please note that incorrect servicing can affect the safety of the appliance and can lead to injury.

To ensure the continued efficient and safe operation of the appliance it is recommended that it is checked and serviced as necessary at regular intervals. The frequency of servicing will depend upon the particular installation conditions and usage, refer to guarantee registration.

If this appliance is installed in a rented property there is a duty of care imposed on the owner of the property by the current issue of the Gas Safety (Installation and Use) Regulations, Section 35. Servicing/ maintenance should be carried out by a competent person in accordance with the rules in force in the countries of destination. To obtain service, please call your installer or Saunier Duval service.

Index

1 Comments on the instructions 13

2 Appliance description 13
2.1 Data label 13
2.2 Mandatory WARNING for EEC countries 13
2.3 Block diagram 14

3 Appliance location 15

4 Safety instructions and regulations 15
4.1 Safety instructions 15
4.2 Regulations 16

5 Appliance installation 17
5.1 Recommendations before mounting 17
5.2 Thema CONDENS dimensions 18
5.3 Thema CONDENS SB dimensions 18
5.4 List of delivered equipment 18
5.5 Fixing to the wall 18
5.6 Gas and water connection 19
5.7 Connection to the condensate trap 21
5.8 Flue connection 22
5.9 Electrical connection 24
5.10 Wiring diagram 26

6 Commissioning 28

7 Specific adjustments 28
7.1 Heating circuit adjustment 28
7.2 Access to the boilers technical data (for professional and After Sales Service use only) 30

8 Draining of the appliance 32
8.1 Heating circuit 32
8.2 Domestic Hot Water circuit 32

Installation and servicing instructions strictly reserved for qualified gas installers

Saunier Duval

9 Gas conversion 32
9.1 Maximum power setting 32
9.2 Reactivation 33

10 Fault finding 34

11 Control / Commissioning 36

12 User information 36

13 Spare parts 36

14 Servicing 36
14.1 Casing 36
14.2 Removable plate / Silencer 37
14.3 Condensate trap 37
14.4 Hydraulic block 38
14.5 Combustion block 40

15 Remplacement of parts 42
15.1 Hydraulic block 42
15.2 Combustion block 44
15.3 Expansion vessel 46
15.4 Ignition module / Ignition and control electrode / Sight glass 47
15.5 Control panel 48

16 Technical data 50

1 Comments on the instructions

- Please give all of the instructions to the user. The user shall keep them for future reference.

We accept no liability in case of damage due to the non-compliance of the instruction manual.

2 Appliance description

2.1 Data label

The data label certifies the origin where the product was manufactured and the country for which it is intended.
Warning! The appliance shall only be used with the gas types indicated on the data label.

2.2 Mandatory WARNING for EEC countries

This appliance is designed, approved and inspected to meet the requirements of the intended market. The data label indicates where the product was manufactured and the country for which it is intended.

This appliance meets the requirements of Statutory Instrument, No. 3083 The Appliance (Efficiency) Regulations, and therefore is deemed to meet the requirements of Directive 92/42/EEC on the efficiency requirements for new hot water appliances fired with liquid or gaseous fuels.

Type test for purposes of Regulation 5 certified by: Notified body 0063. Product/ production certified by: Notified body 0086.

The CE mark on this appliance shows compliance with:

- Directive 90/396/EEC on the approximation of the laws of the Member States relating to appliances burning gaseous fuels.
- Directive 73/23/EEC on the harmonisation of the Laws of the Member States relating to electrical equipment designed for use within certain voltage limits.
- Directive 89/336/EEC on the approximation of the Laws of the Member States relating to electromagnetic compatibility.

IMPORTANT. With regards to the Manual Handling Operations, 1992 Regulations, the following lift operations are recommended as the appliance weight exceeds a one-man lift.

- Clear the route before attempting the lift.
- Ensure safe lifting techniques are used - keep back straight - bend using legs.
- Keep load as close to body as possible.
- Do not twist - reposition feet instead.
- If two persons performing lift, ensure co-ordinated movements during lift.
- Always use assistance if required.

Manufacturer's instructions must not be taken as overriding statutory requirements. Reference in these instructions to British standards and statutory regulations/ requirements apply only to the United Kingdom. For Ireland the current edition of I.S.813 «Domestic Gas Installations» must be used.
This appliance certificated to the current issue of EN 483: 2000 for performance and safety. It is important that no alteration is made to the appliance, without permission, in writing, from Saunier Duval. Any alteration that is not approved by Saunier Duval could invalidate the warranty and could also infringe the current issue of the Statutory Requirements.

2.3 Block diagram

Legend

1 Flue outlet
2 Main heat exchanger
3 Burner
4 Ignition and control electrode
5 Fan
6 Gas control valve
7 Condensate trap
8 Overheat safety thermostat
9 Heating expansion vessel
10 Heating return thermistor
11 Heating flow thermistor
12 Ignition module
13 Pump
14 Water pressure sensor
15 Domestic plate to plate heat exchanger (*)
16 Three way valve
17 Drain cock
18 DHW flow sensor (*)
19 Filling system (*)
20 Filter on cold water inlet (*)
21 Heating isolating valve
22 Domestic cold water isolating valve (*)
23 Heating isolating valve
24 Gas isolating valve
25 Heating safety valve
26 Thermal fuse
27 Silencer
28 Filling tap (*)
29 By-pass

A Heating return
B Cold water inlet (*)
C Heating flow
D Domestic hot water outlet (*)
E Gas

(*) Not required for SB models

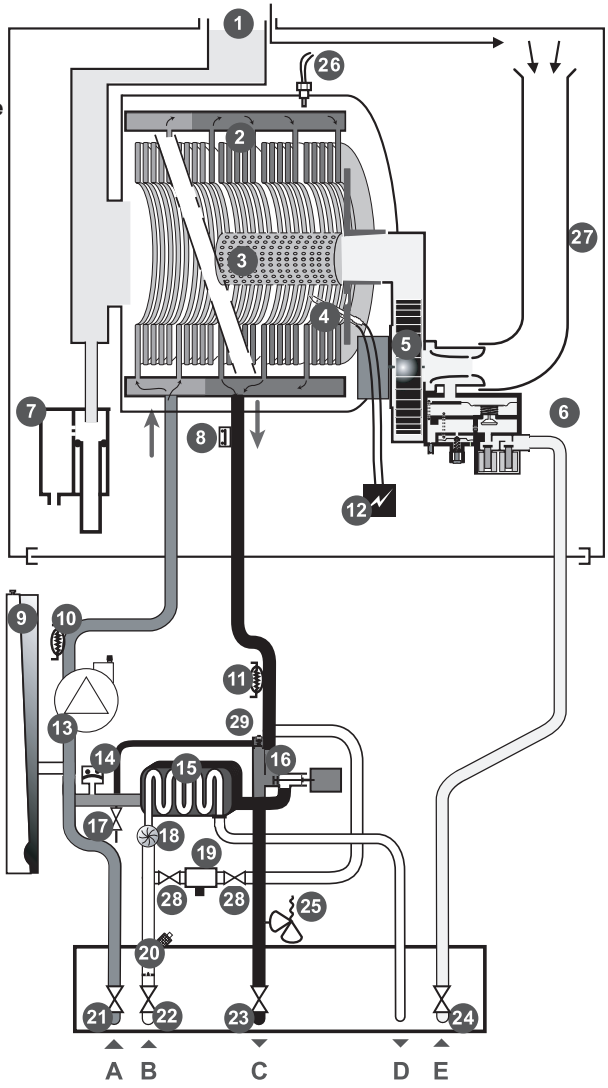

3 Appliance location

- This appliance is not suitable for outdoor installation.
- This appliance may be installed in any room, although particular attention is drawn to the installation of an appliance in a room containing a bath or shower where reference must be made to the relevant requirements. In GB this is the current I.E.E. WIRING REGULATIONS and BUILDING REGULATIONS.
- In IE reference should be made to the current edition of I.S.813 «Domestic Gas Installations» and the current ETCI rules.
- Make sure you keep an appropreate distance between the sides of the appliance to ensure total accessibility for servicing.
- The appliance must be mounted on a flat wall, which is sufficiently robust to take its weight.
- The appliance is room sealed, so when it is installed in a room or space, a permanent air vent is not required.
- Do not install the appliance above another appliance that could damage it (for example, above a cooker that might emit steam or grease) or in a room, which has a lot of dust in the atmosphere which is corrosive.

4 Safety instructions and regulations

This appliance is tested and certificated for safety and performance. It is, therefore, important that no alteration is made to the appliance, without permission, in writing, from Saunier Duval.

Any alteration not approved by Saunier Duval, could invalidate the certification, appliance warranty and may also infringe the current issue of the statutory requirements.

4.1 Safety instructions

If the gas pressure at the input of the appliance is outside the range specified, you shall not start the appliance. If the cause of the problem cannot be found nor solved, please contact the Gas Utility company.

Warning! Incorrect installation can cause electric shock or appliance damage.

- When making the connections, locate the sealing washers properly so as to avoid any gas or water leakage.
- Never use a wire brush or stiff-bristle scrubbing brush to clean the heat exchanger as this could damage the appliance.
- Under no circumstances must the User interfere with or adjust sealed parts.

Under Section 6 of The Health and Safety at Work Act 1974, we are required to provide information on substances hazardous to health.
The adhesives and sealants used in this appliance are cured and give no known hazard in this state.

In the event of the appliance overheating the safety devices will cause a safety shutdown. If this happens, call your installation/servicing company.

Warning! This appliance must be earthed. This appliance must be wired in accordance with these instructions. Any fault arising from incorrect wiring cannot be put right under the terms of the Saunier Duval guarantee.

The following safety instructions must be imperatively followed during the maintenance and the replacement of spare parts.

- Stop the appliance (see chapter “Deactivation” of the Instructions for use).
- Disconnect the appliance from the mains power supply with the socket or the double-pole switch (with a minimum gap of 3mm for both poles).
- Turn off the gas control valve.
- Close the shut off valves located on the connection sockets.
- Drain the appliance when you want to change the hydraulic parts of the appliance.
- Let the appliance cool down before undertaking any maintenance operation.
- Protect all the electrical components from water when you achieve any operations.
- Use only new O-rings and gaskets.
- After having compleated work on gas carrying components, check their tightness.
- When the replacement work is compleated, perform an operation test of the replaced parts and the appliance.

4.2 Regulations

When installing and commissioning the appliance, the regulations below shall be observed in their current version:
In your own interests and that of safety, it is the Law that ALL gas appliances must be installed by a competent person only, in accordance with the current issue of the following regulations.

In GB the installation of the appliance must be carried out by a competent person as described in the following regulations:

- The manufacturer’s instructions supplied.
- The Gas Safety (Installation and Use) Regulations.
- The appropriate Buildings Regulations either The Building Regulations, The Building Regulations (Scotland), The Building Regulations (Northern Ireland).
- The Water Fittings Regulations or Water byelaws in Scotland.
- The Health and Safety at Work Act, Control of Substances Hazardous to Health (COSHH).
- The Current I.E.E. Wiring Regulations.

Where no specific instructions are given, reference should be made to the relevant British Standard Code of Practice.
In IE, the installation must be carried out by a competent person and installed in accordance with the current edition of I.S.813 «Domestic Gas Installations», the current Building Regulations and reference should be made to the current ETCI rules for Electrical Installation.

In GB the following Codes of Practice apply: BS4814, BS6798, BS5440 Part 1 and 2, BS5546 Part 1, BS5449, BS6891, BS6700, BS7074 Part 1 and 2, BS7593, BS7671.
In IE: I.S.813, BS5546, BS 5449, BS 7074, BS 7593.

Where no British Standard exists, materials and equipment should be fit for their purpose and of suitable quality and workmanship. The installation of this appliance must be carried out by a competent person in accordance the rules in force in the countries of destination. Manufacturer’s instructions

must not be taken as overriding statutory requirements.

If the appliance is to be installed in a timber frame building it should be fitted in accordance with the Institute of Gas Engineers document IGE/UP/7/1998. If in doubt seek advice from the local gas undertaking or Saunier Duval.

5 Appliance installation

All the dimensions in this chapter are expressed in mm.

5.1 Recommendations before mounting

5.1.1 Domestic hot water circuit design

The circuit should be designed to avoid any unnecessary flow losses (decrease the number of elbows).

The boiler will operate with a minimum supply pressure but with a low flow. Optimum performance will be achieved with a pressure of 1 bar.

5.1.2 Heating circuit design

The Thema CONDENS boilers can be used for any kind of installation: serial or derivated double tube, single tube, hot floor, etc...
Heating surfaces can be made up with heaters, convectors or unit heaters.

Warning: We advise you to add an inhibitor to the heating circuit water (according to the manufacturer's recommendations) to avoid gas production and oxide formation.

The pipework sections should be fixed by using the following flow/pressure curve (see chapter "Heating circuit adjustment"). The system will be calculated according to the flow corresponding to the power that is really required without taking into account the maximum power that the boiler can supply. Nevertheless, we advise you to have a flow big enough so that the temperature difference between outgoing and return is under or equal to 20°C. The minimum flow rate is indicated in the chapter "Technical Data" at the end of this instruction manual.

The piping route should be designed in such a way that it avoids any air locks and make purging of gas from the system easier. Bleeders should be placed at each high point of the system as well as on any radiators.

Total water volume accepted by the heating circuit depends, amongst other things, on the cold static load. The expansion tank fitted in the boiler is delivered set in plant (see chapter "Technical Data" at the end of this instruction manual). At commissioning, it is possible to change this pressure in case of a more larger static load. We advise you to provide a drain valve at the lowest point of the system.

If thermostatic radiator valves are used, we advised you not to fit in a room where a room thermostat is fitted.

- If the boiler is not immediately installed, protect all the pipe fittings so as to avoid that any plaster element or paint could impede the connection.

5.1.3 Water treatment

In the case of an existing installation, it is Essential that prior to installing the new boiler the system is thoroughly flushed. For optimum performance after installation of a new system, the boiler and its associated central heating system should also be flushed.
Flushing should be carried out in accordance with BS7593: 1992 using a cleanser such as Sentinel X300 or X400, Fernox Superfloc or Salamander corrosion guard cleaner.

For long-term corrosion protection, after flushing, an inhibitor suitable for stainless steel heat exchangers should be used, refer to the current issue of BS 5449 and BS 7593 on the use of inhibitors in central heating systems. Examples are Sentinel X100 Fernox or Salamander corrosion guard inhibitor.

5.2 Thema CONDENS dimensions

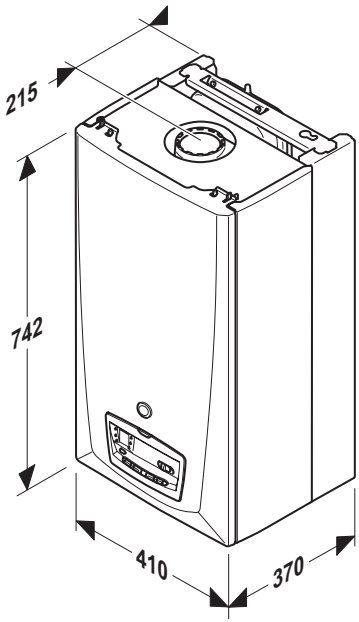

5.3 Thema CONDENS SB dimensions

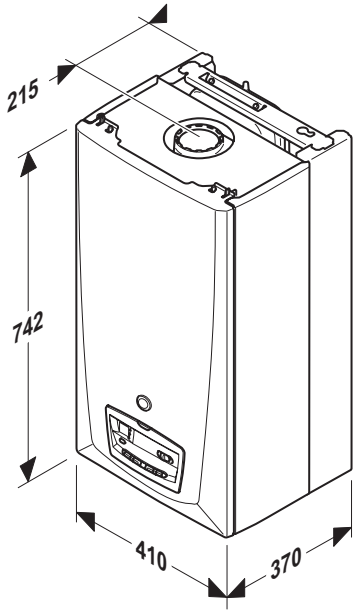

5.4 List of delivered equipment

The boiler is delivered in one package:

- One documentation pack:
  - 1 user and installation manual
  - 1 guarantee envelope
  - 1 Wiring diagram
  - 1 gas conversion label
- One parts pack:
  - 1 drain tube
  - 2 filling loop extensions (*)
  - 1 connection pack + wall template
  - 1 gasket+ flow limiter pack
  - 1 valve pack

(*) Not required for SB models

The flue is supplied separatly and will depend upon the configuration of the installation.

5.5 Fixing to the wall

- Make sure the material you use fits those of the appliance.

- Chose the location of the appliance. See chapter “Appliance location”.

The hanging bracket will be adapted to the features of the bearing wall and will have to take into account the weight of the boiler filled with water.

- Drill the holes for the fixing screws in accordance to the diagram below and to the size of the wall template delivered with the appliance.

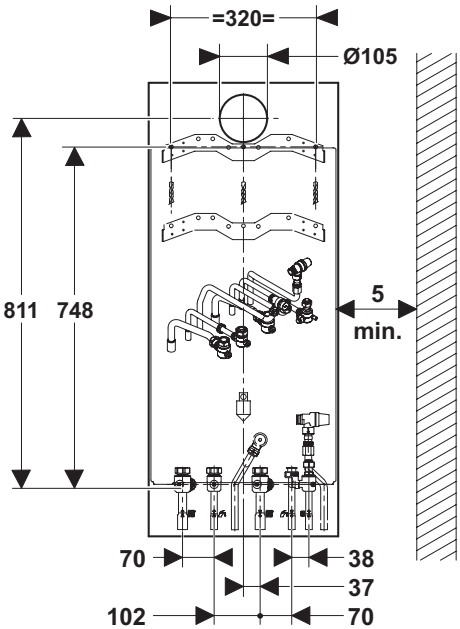

- Place the boiler above the hanging bracket.
- Slowly lower the boiler.
- Set the seals on the different pipe fittings.
- Make connections to boiler, gas, water and heating cocks with the tube assemblies supplied in piping pack.
- Do not forget to connect the 2 filling loop extensions on the 2 filling taps. (*)

(*) Not required for SB models

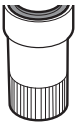

5.6 Gas and water connection

- Before undertaking any operation, carefully clean the pipes with an appropriate product in order to remove impurities such as filings, welds, different oils and greases that may be present.
  These foreign bodies may enter the boiler and disrupt the operation.
- Do not use any solvents that could damage the heating circuit.
- Take care when soldering pipes as the heat could damage the seals and cause leakage. Fit washers after joints have cooled.

The pipe from the heating safety discharge valve must not discharge above an entrance, window or any type of public access area.

- Only use the genuine seals delivered with the appliance.
- Check that there is no leakage. Repair if need be.

Take the short safety discharge tube, union nut and seal, supplied loose in the boiler fittings pack.

This must be extended, using not less than 15mm o.d. pipe, to discharge, in a visible position, outside the building, facing downwards, preferably over a drain.

The pipe must have a continuous fall and be routed to a position so that any discharge of water, possibly boiling, or steam cannot create any danger to persons, damage to property or external electrical components and wiring.

To ease future servicing it is advisable to use a compression type fitting to extend the safety discharge valve tube.

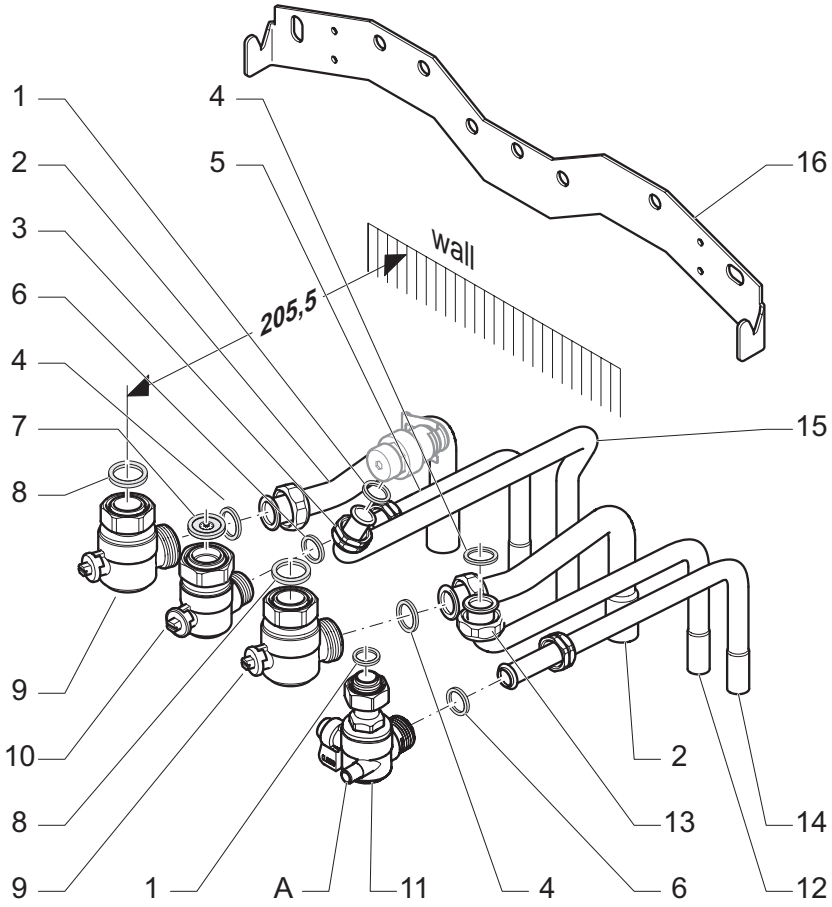

Legend

Connection pack:

- **A** Pressure test point
- **2** Heating pipe: angular bush to weld Ø 22 + nut 3/4" (x2)
- **4** Gasket 3/4" (x3)
- **5** Cold water inlet pipe (*): angular bush to weld Ø 15 + nut 1/2"
- **6** Gasket 1/2" (x4)
- **9** Heating isolating valve
- **10** Cold water inlet isolating valve (*)
- **11** Gas inlet isolating valve
- **12** Domestic hot water outlet pipe (*): angular bush to weld Ø 15
- **13** Nut 3/4" (*)
- **14** Gas pipe: angular bush to weld Ø 15 + nut 1/2"
- **16** Hanging bracket

Gasket + limiter pack:

- **1** Flat gasket (x2)
- **7** Cold water flow limiter (*)
- **8** Gasket 3/4" (x5)

Valve pack:

- **1** Flat gasket
- **3** Nut
- **15** Evacuation pipe for heating safety valve

(*) Not required for SB models

5.7 Connection to the condensate trap

5.7.1 Filling of the condensate trap

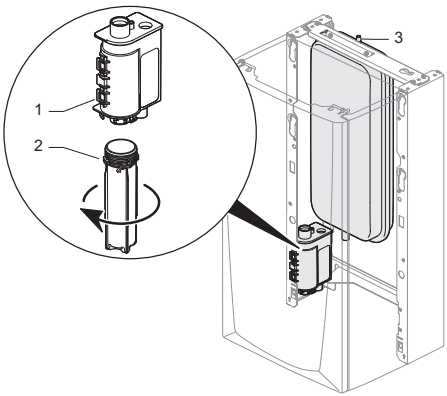

Legend
1 Condensate trap
2 Filling trap
3 Expansion vessel valve

- Unscrew the filling trap (2) located under the condensate trap.
- Fill the trap 3/4 full with water (2).
- Replace the filling trap (2) in the condensate trap (1).

Warning ! The condensate trap must be pre-filled before the first operation of the boiler.

5.7.2 Condensate drain

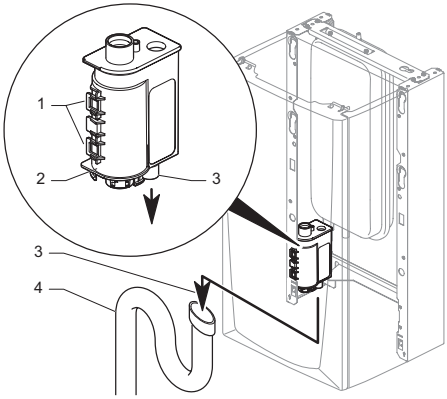

Legend
1 Condensate trap retaining clips
2 Condensate trap
3 Condensate outlet
4 Outlet siphon

- Connect the condensate outlet (3) to a discharge system leading to the sewer.

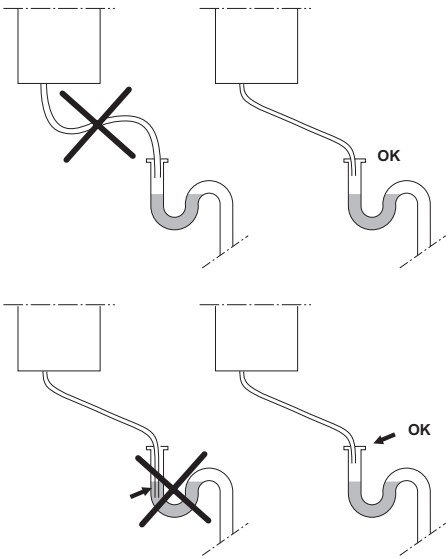

5.8 Flue connection

Different flue outlet configurations can be carried out.

- Consult your supplier for more information about the other possibilities and associated accessories.

Warning! You can only use flue accessories approved for the Thema CONDENS.

- Ensure a slope of 44 mm/m between the elbow and the terminal extremity to enable the return of condensate to the appliance.

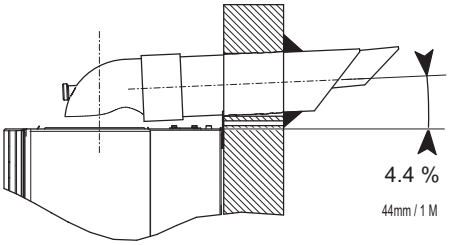

- Whatever the kind of flue system chosen, observe the minimum distances indicated in the chart below to position the flue terminals.

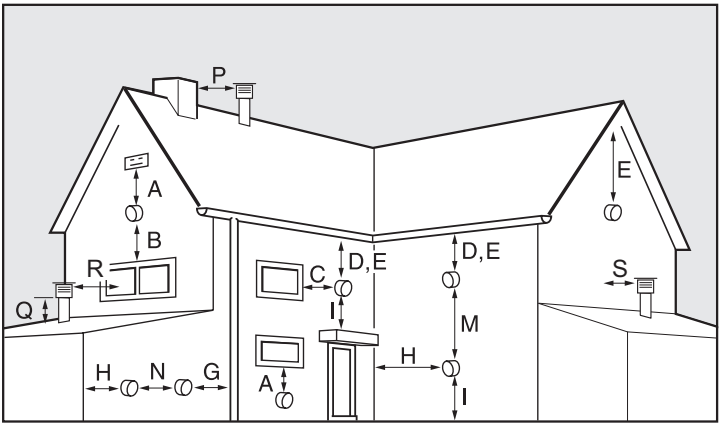

UNDER CAR PORT etc.

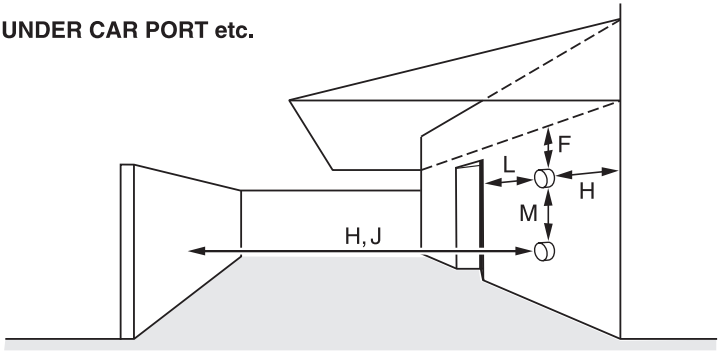

Position	Position of the flue terminal	mm
Horizontal flues		
A	directly below an opening, air brick, opening windows	300
B	above an opening, air brick, opening windows	300
C	horizontally to an opening, air brick, opening windows	300
D	below gutter, drain/soil pipe	25
E	below eaves	25
F	below a balcony or car port	25
G	from vertical drain pipes and soil pipes	25
H	from internal/external corners	25
H*	to a boundary alongside the terminal	300
I	above adjacent ground or balcony level	300
J	from surface or a boundary facing the terminal	600
L	from opening (door/ window) in car port into dwelling	1200
M	vertical from a terminal	1500
N	horizontally from a terminal	300
Vertical flues		
P	from another terminal	600
Q	above roof level	300
R	from adjacent opening window	1000
S	from adjacent wall to flue	300

5.8.1 Horizontal concentric flue Ø 60/100 (C13 type installation)

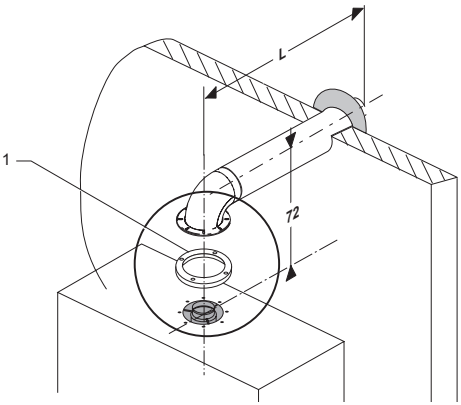

Legend
1 Gasket

Maximum flue index: 150 Pa
This value is reached with the length of the maximum duct (L) + 1 90° elbow.

Flue model	Max. length
Ø 60/100	5.5 m

Every time a 90° elbow is used (or 2 off 45°), the length (L) should be reduced by 1 m.

A Plume management kit can be installed at the extremity of the duct.

- Refer to the instructions sheet of the accessory and take it into account the following length:

Length L2 = L	Length L1
0.5	8
1	7
2	5.5
3	3.5
4	2

Every time a 90° elbow is used (or 2 off 45°), the length (L1) should be reduced by 2 m.

5.8.2 Vertical concentric flue Ø 60/100 (C33 type installation)

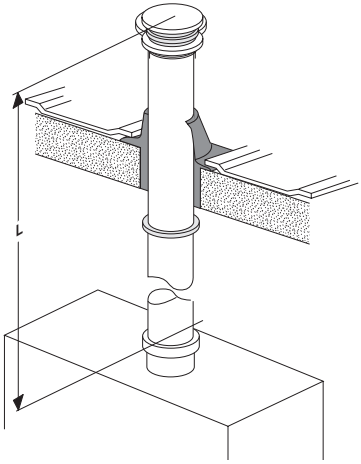

Maximum flue index: 150 Pa

This value is reached with the length of the maximum duct (L) + 1 90° elbow.

Flue model	Max. length
Ø 60/100	6.5 m

Every time an extra 90° elbow is used (or 2 off 45°), the length (L) should be reduced at by 1 m.

5.8.3 Twin flue 2 x Ø 80 (C53 type installation)

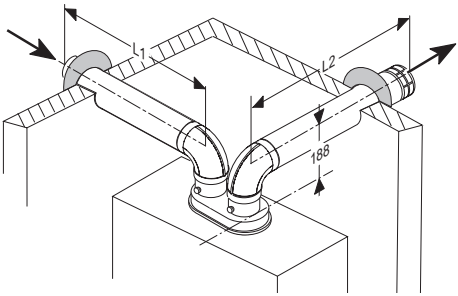

Maximum flue index: 150 Pa

This value is reached with 2 elbows, the separator and the maximum duct length (L1+L2) of 40 m.
Every time an extra 90° elbow is used (or 2 off 45°), the length (L) should be reduced by 2 m.

5.9 Electrical connection

Warning! Incorrect installation can cause electric shock or appliance damage.

- Connect the power cable of the boiler to the 230 V single-phase + earth network.
- Observe the live and neutral connection on the boiler.
- Do not use cable over 10 mm in diameter for electrical connections.

Important: Electrical connection of the appliance must be made only by a skilled professional.

Isolation should be by a double pole switched fused spur box, with a minimum gap of 3mm for both poles.

The fuse of the PCB must be connected to the neutral.

5.9.1 Access to electrical connections

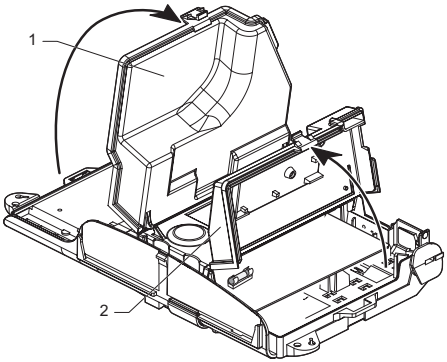

Legend
1 Access on factory connection side
2 Access on installer connection side

- Open the installer connection side (2) to carry out the electrical connections.

5.9.2 Connection to the PCB

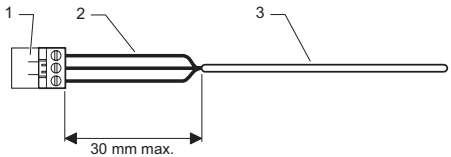

Legend
1 Terminal block
2 Electrical wires
3 Sheath

Warning ! When connecting electrical cables to the terminal block on the PCB:

- Keep a 30 mm maximum distance between the terminal block (1) and the stripped sheath (3).
- Otherwise, fasten the electrical wires (2) together with a cable tie.
- Secure the cables with the electrical box cable clamp.

5.9.3 Separation of high and low voltage cables

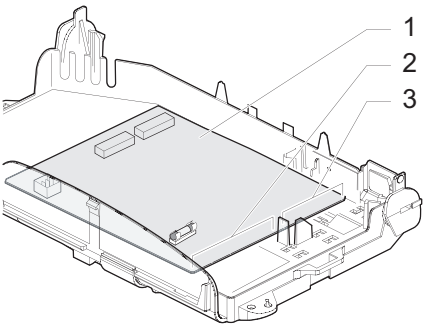

Legend
1 Main board
2 Passage for high voltage
3 Passage for low voltage

- Respect passage (2) for low voltage cables and (3) for high voltage cables.

5.9.4 External controls connection

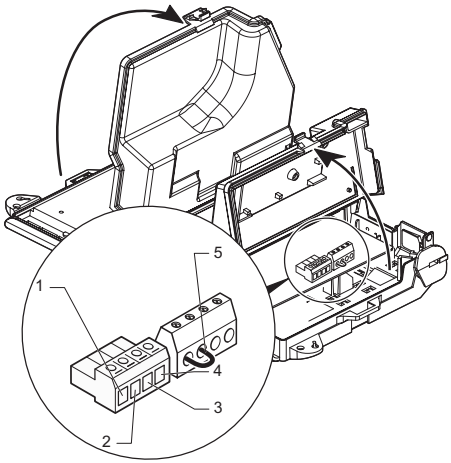

Legend
1 Neutral
2 Room Thermostat
3 Live
4 Frost Protection
5 Link wire

Important ! Remove link wire (5) when fitting external controls.

5.10 Wiring diagram

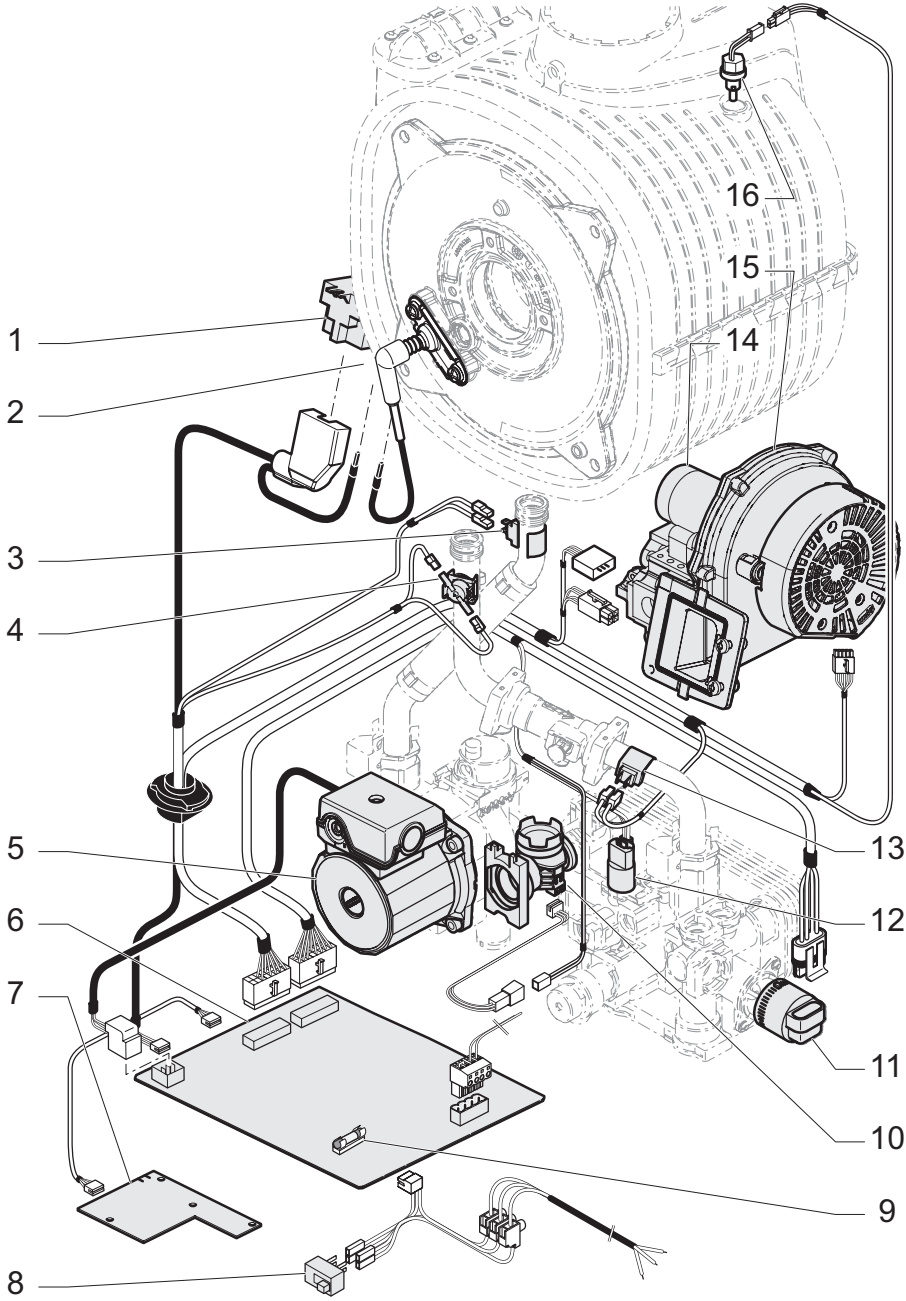

Legend

1 Ignition module
2 Ignition and control electrode
3 Heating return thermistor
4 Overheat thermostat
5 Pump
6 Main board
7 User interface
8 On/Off switch
9 Fuse
10 Water flow sensor
11 Three way valve
12 Water pressure sensor
13 Heating flow thermistor
14 Gas valve
15 Fan
16 Thermal fuse

6 Commissioning

- Slide the switch until the “I” symbol appears.The display and operating mode indicator light up: the boiler is ready to run.
- Open the isolating valves located on the pipes: they will be placed in the direction of the flow.
- Open the auto air vent on the pump as well as the automatic bleeders of the system.
- Open the two blue filling loop valves situated under the boiler simultaneously until you obtain a 2 bar pressure on the indicator.
- Bleed each radiator to remove the air, re-tighten bleed screws.
- Leave the cap on the pump auto air vent open.
- Flush the domestic hot water system by openning the hot water taps for several minutes.
- Make sure the display indicates a system pressure of between 1 and 2 bars. Re-fill system as necessary.
- Operate the appliance for at least 15 minutes on heating with a heating temperature equal or greater to 50°C.
- Flush the domestic hot water system by openning the hot water taps for several minutes.
- Make sure the display indicates a system pressure of between 1 and 2 bars. Re-fill system as necessary.

7 Specific adjustments

7.1 Heating circuit adjustment

This flow rate will be adjusted according to the system calculations.
When it is delivered, the (1) integrated bypass screw is open by half a turn.

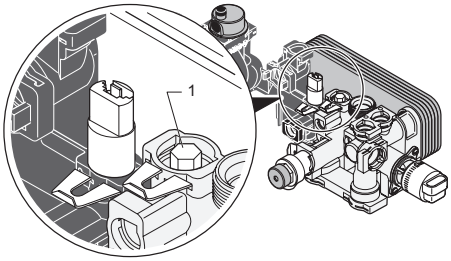

Legend
1 Bypass screw

- Depending on the requirements, adjust this screw (for example, screw for closing) in order to fit the available pressure head to the system energy loss according to the output/pressure curve.

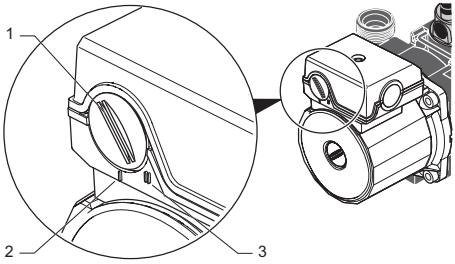

Legend
1 Speed selector of pump
2 Speed I
3 Speed II

- Turn the selector (1) to choose pump speed I or II in relation to the output/ pressure curve.

Output/pressure curve ThemaCondens F 24 E

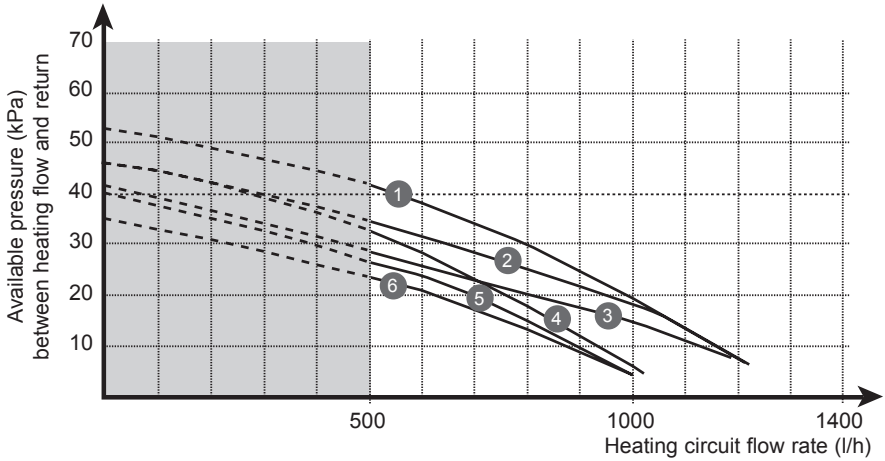

Legend

Speed II

1 By-pass fully shut
2 Open 1/2 turn
3 Open 1 turn

Speed I

4 By-pass fully shut
5 Open 1/2 turn
6 Open 1 turn

Output/pressure curve ThemaCondens F 18 E SB and F 30 E

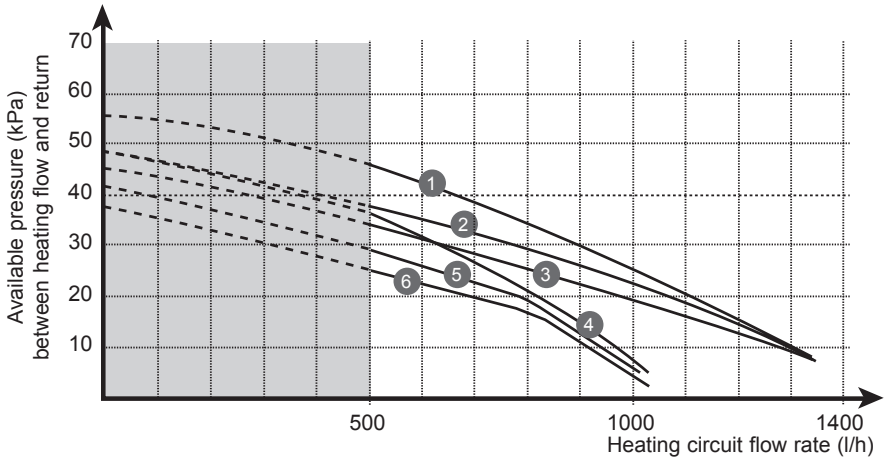

Legend

Speed II

1 By-pass fully shut
2 Open 1/2 turn
3 Open 1 turn

Speed I

4 By-pass fully shut
5 Open 1/2 turn
6 Open 1 turn

7.2 Access to the boilers technical data (for professional and After Sales Service use only)

The access to the boilers technical data allows you to make some adjustments and to analyse potential malfunctions.

For example, you can adjust the maximum power of the boiler in heating mode on all the values included between the powers indicated in the chart at the end of this manual. This makes it possible to adapt the power supplied to the real needs of the system so as to avoid any over-power, while maintaining a high efficiency.
Note: the heating power decrease has no effect on the domestic hot water power.

Do as follows:

- Press for more than 10 seconds on the “MODE” key to access the setting menu.
- When “0” and “” appear, use the keys + or - on the or side until “96” appears on the indicator.
- Once again press the “MODE” key to display the first parameters menu, i.e. the heating maximum power (menu COD.1).
- When the menu «COD.1» appears on the display, press on the + or – keys on the or side to get to the next menu or press on the MODE key if you wish to change this parameter.
- In parametes mode, select the desired value by using the + or – keys on the or side.
- Validate by pressing the “MOD” key and return to the initial menu.
- Restart the preceding operations in order to change other parameters.

Note: the indicator goes back to its normal position after 10 minutes without any operation or after having pressed the “MODE” key for more than 3 s.

N° menu	Title	Action
COD. 1	maximum heating power	Press the + - keys to set the required value (factory setting for Thema CONDENS F 18 E SB: 18 factory setting for Thema CONDENS F 24 E and F 30 E: 15)
COD. 2	flue configuration	No adjustment required for this kind of boiler. Flue codes have no effect on the boiler operation.
COD. 3	minimum heating temperature	Select a value: 28°C, 38°C, 50°C, 55°C, or 70°C (factory setting: 28°C)
COD. 4	maximum heating temperature	Select a value: 50°C, 73°C, or 80°C (factory setting: 73°C)
COD. 5	pump mode	Select an operating mode: 1 - intermittent with room thermostat (factory setting) 2 - intermittent with burner 3 - permanent
The two following menus require an outdoor sensor:		
COD. 6	heating curve	Choose a heating curve from the following 10: 0.2 / 0.6 / 1.0 / 1.2 / 1.5 / 2.0 / 2.5 / 3.0 / 3.5 / 4.0 (See graphic below)

COD. 7	heating curve base	Choose a value: 15°C / 16°C / 17°C / 18°C / 19°C / 20°C / 21°C / 22°C / 23°C / 24°C / 25°C
COD. 8	burner forcing	Select an operating mode: 0 - normal operation. (factory setting) 1 - forcing at P. mini. 2 - forcing at P. maxi.
COD. 8 menus and following would only be used by After Sales Service Engineers.		
COD. 23	select product code	Select a value between 0 and 199.
COD. 24	set the offset on the minimum fan speed	Select a value between 0 and 99 (99 = 990 rpm). (no 10 rpm)
COD. 25	rmaximum condensation power	Select a value between 0 and 99 (99 = -1485 rpm) (no 15 rpm)

Heating curve

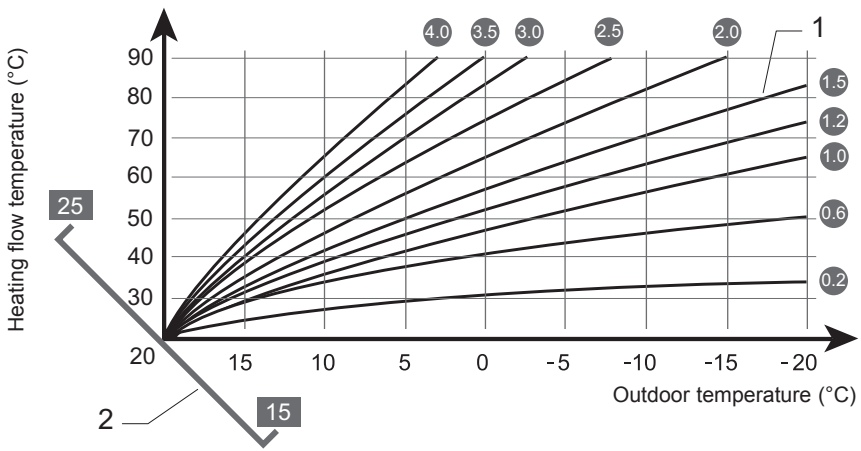

Legend

1 Menu 6 setting

2 Menu 7 setting

8 Draining of the appliance

8.1 Heating circuit

- Turn on the drain cock (1) provided at the system low point.
- Provide an air intake by opening a radiator bleed screw.

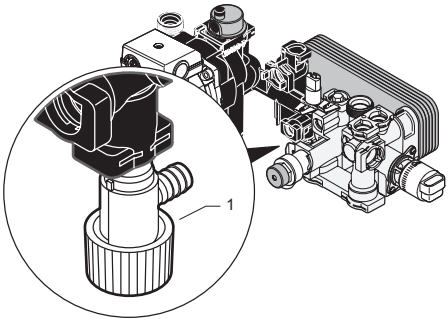

- In order to drain only the water in the boiler, first shut off the heating flow and return isolating valves.

8.2 Domestic Hot Water circuit (*)

- Turn off the water cock of the system.
- Create an air intake by turning on a hot water tap or open the DHW safety valve.

(*) Not required for SB models

9 Gas conversion

For operation with LPG, some adjustments must be made on the gas valve

- First of all remove the front panel.
- Connect a CO2 analyser to the flue elbow.

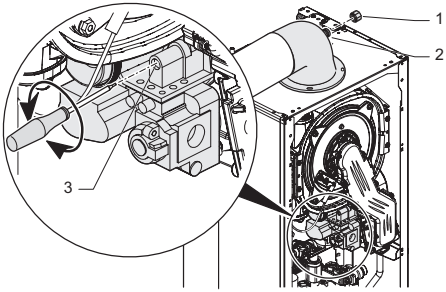

Legend
1 Plug
2 Test point
3 Maximum power setting screw.

- Take off cap (1) then insert a sampling tube in the test point (2) in the flue system.

9.1 Maximum power setting

- In domestic hot water with CO2:
- Fully open a hot water tap.
- Wait for 2 minutes or so, until the CO2 reading has stabilized.

- In heating with CO2:
- Adjust the boiler on «Burner forcing at P. max.» using menu COD.8 described in chapter «Access to the boilers technical data».
- Perform a heating demand.
- Wait for 2 minutes or so, until the CO2 reading has stabilized.

9.1.1 Setting from G20 to G31

- Turn the screw (3) 2 full turns clockwise.
- Wait for about 2 minutes in order to read a stabilized CO2 value.
- Progressively adjust the setting in order to obtain the CO2 value in G31 shown in the chart below.

9.1.2 Setting from G31 to G20

- Turn the screw (3) 2 full turns anticlockwise.
- Wait for about 2 minutes in order to read a stabilized CO2 value.
- Progressively adjust the setting in order to obtain the CO2 value in G20 shown in the chart below.

9.2 Reactivation

- Refit flue gas test point cap in place.
- Replace front panel.

Note: After re-fitting the front panel, the CO2 values must correspond to that given in the table below.

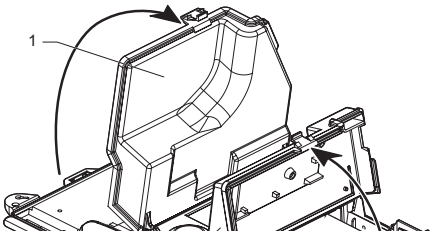

Legend
1 Gas change label position

- Stick the gas change label in its place (1) on the cover of the electric box.
- After adjusting and remounting the sealed panel, switch the COD. 8 menu “burner forcing” back to its normal operating mode (factory setting = 0) if maximum power has been adjusted in heating mode.

Gas changing adjustment	Unit	F 18 E SB	F 24 E	F 30 E
Heating output max. hot water	kW	-	24	29.6
Heating output min. heating	kW	18.3		24.1
G20				
CO2 case on	%	9 +/- 0.2		
CO2 case off	%	9.2 +/- 0.3		
G31				
CO2 case on	%	10.1 +/- 0.2		
CO2 case off	%	10.3 +/- 0.3		

10 Fault finding

You will find the list of some fault codes in the operating instructions.
The faults described in this chapter should be carried out by a skilled professional and if need be by SAUNIER DUVAL's After Sales Service.

Important: a central heating system cannot operate efficiently if it is not filled with water and if the air it contains at first has not been completely removed. If those requirements are not fulfilled, some noise originated by the water boiling inside the boiler and noise of water chute inside the radiators could appear.

Code	Description	Possible cause
F1, F4	Ignition fault, boiler fialed to light	No gas / Insufficient gas Incorrect gas valve adjustment Electrode ignition lead defect Electrnic igniter defective Check air inlet duct and connections to igniter unit
F5	Overheat fault	Overheat stat operated Maximum temperature exceeded Check thermistor connections Air in system with thermistor at maximum setting Faulty overheat stat connection
F6	Central heating flow thermistor fault	Thermistor cable defective/broken Thermistor faulty Check that thermistor attached correctly to pipe
F7	DHW thermistor fault	
F9	Water pressure sensor fault	Faulty sensor connection Check wiring
F10	Central heating return thermistor fault	Thermistor cable defective/broken, thermistor faulty Check that thermistor attached correctly to pipe
F11	User interface connection fault	Check wiring between mainboard and user interface
F13	Main board connection fault	Main board defective Check connection and wires
F16	Flame detection fault (flame presence for more than 5 seconds after burner stopped)	Gas valve defective
F18	User interface fault	Faulty user interface
F19	Central heating thermistor unplugged	Thermistor cable defective/broken, thermistor faulty Check that thermistor attached correctly to pipe
F20	Software incompatibility	Incorrect user interface or main board Incorrect product code
F23	Water circulation fault	Possible pump failure
F26	Maximum delta temperature (flow - return)	Water circulation fault Check central heating flow and return connection
F28	Permanent drift between flow sensor and return sensor	Check central heating flow and return thermistor connection Thermistor defective
F29	Thermal fuse	Replace the heat exchanger

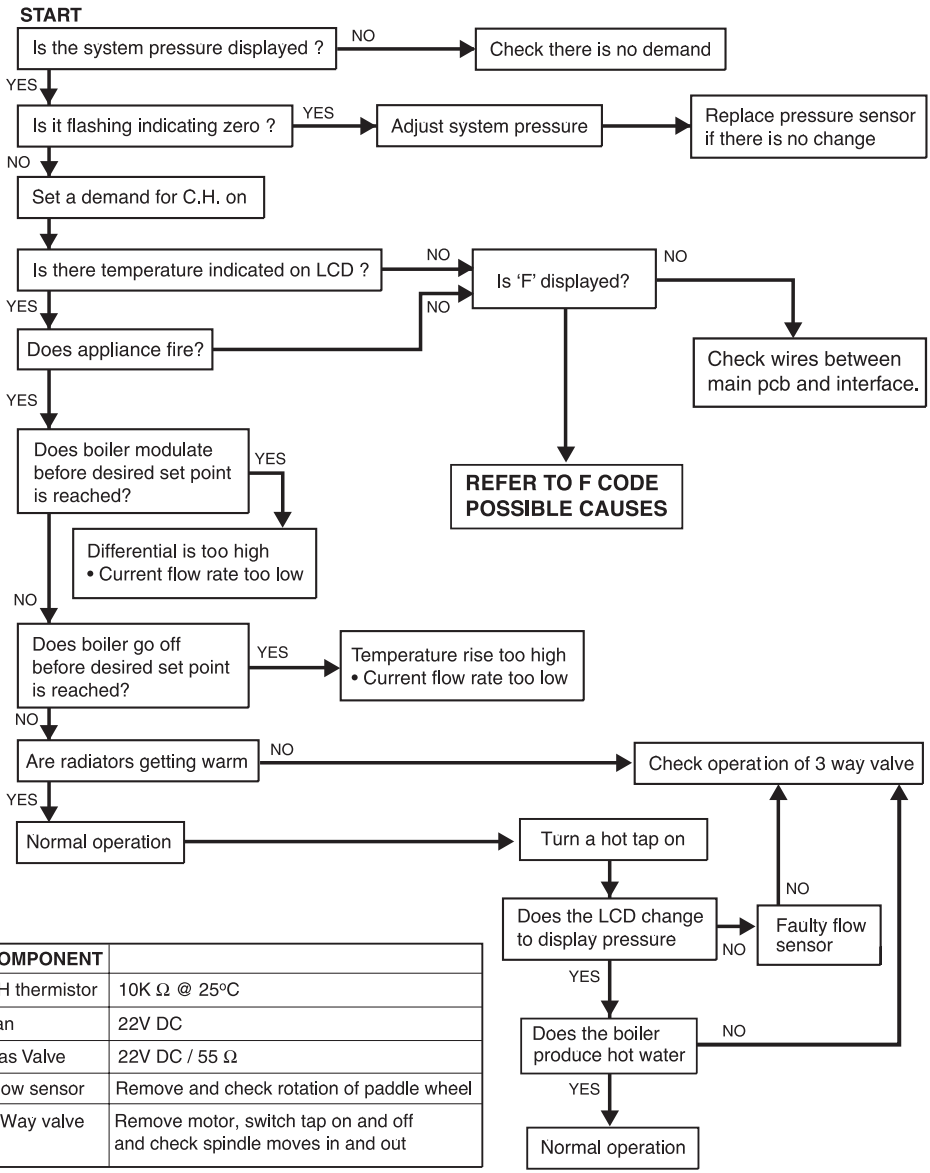

COMPONENT	
CH thermistor	10K Ω @ 25ºC
Fan	22V DC
Gas Valve	22V DC / 55 Ω
Flow sensor	Remove and check rotation of paddle wheel
3 Way valve	Remove motor, switch tap on and off and check spindle moves in and out

11 Control / Commissioning

Once the appliance is installed, check whether it runs:

- Start the appliance according to the indications of the operating instructions and check whether it runs.
- Check the appliance for leaks (gas and water) and eliminate any leakage found.
- Check that the ignition is correct and that the flames of the burner are uniform.
- Check that the flue exhausts properly.
- Check the whole control and safety devices, their setting and their operating state.

12 User information

The user should know how to use the appliance.

- Explain to the user the appliance operating principles and demonstrate if required.
- Have a look at the operating instructions together and answer any questions if need be.
- Give the user all of the manuals and documents concerning the appliance and tell the user to keep them near the appliance.
- Explain more precisely the safety principles they should observe.
- Remind the user to regularly service the appliance.

13 Spare parts

In order to guarantee a long-lasting operating of the parts of the appliance and keep it in good condition, only original spare parts from SAUNIER DUVAL should be used when repairing and servicing the appliance.

- Only use original spare parts.
- Make sure that these parts have been correctly assembled with regards to their position and basic sense.

14 Servicing

Warning!

- Before starting the maintenance of the appliance, read carefully the chapter “Safety instructions”.

14.1 Casing

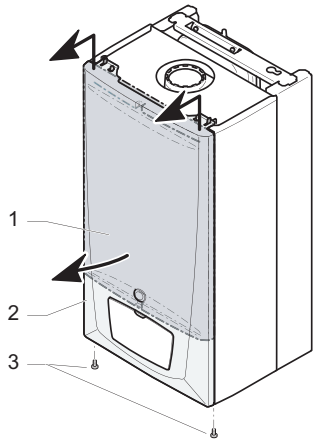

Legend
1 Insulation
2 Front panel
3 Front panel retaining screws

- Remove the 2 retaining screws (3) from the front panel.
- Pull gently on the front panel (2) from the bottom and lift up to remove.

14.2 Removable plate / Silencer

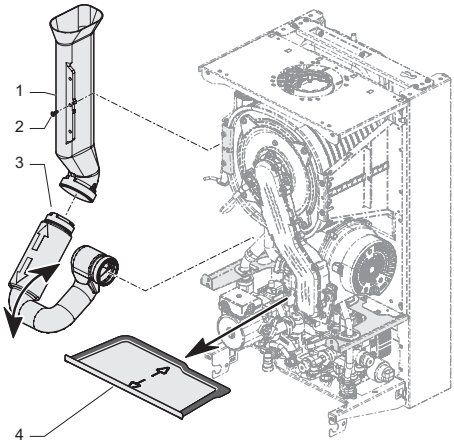

Legend

1 Upper silencer
2 Upper silencer retaining screw
3 Lower silencer
4 Removable plate

14.2.1 Removable plate

- Remove the removable plate (4) by pulling towards you.

14.2.2 Silencer

- Remove the removable plate (4).
- Disconnect the lower silencer (3).
- Remove the upper silencer retaining screw (2).
- Remove the upper silencer (1).
- If necessary, clean the inside of the 2 silencers using a dry cloth taking care not to damage the foam.
- Repeat the above operations in reverse to reassemble the unit.

14.3 Condensate trap

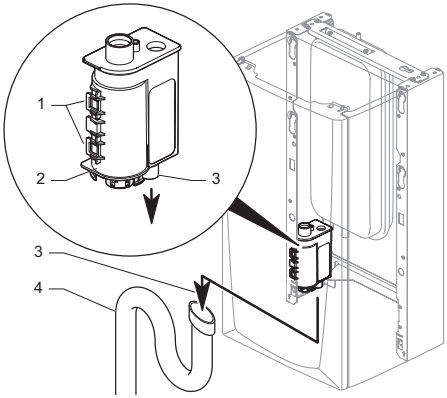

Legend

1 Condensate trap retaining clips
2 Condensate trap
3 Condensate outlet
4 Outlet siphon

- Drain the filling siphon of the condensate trap (see chapter on “Filling the condensate trap”).
- Disconnect the outlet pipe located under the condensate trap (2).
- Disconnect the condensate trap pipe located under the combustion chamber (see chapter on “Spare parts”).
- Remove the condensate trap by releasing the retaining clips (1) and taking care not to spill any liquid.
- Clean the pipes and remove any debris.
- Clean the condensate trap by rinsing under water.
- Reassemble the unit taking care to position the sealing gaskets correctly and to fill the filling siphon according to the chapter on “Filling of the condensate trap”.

14.4 Hydraulic block

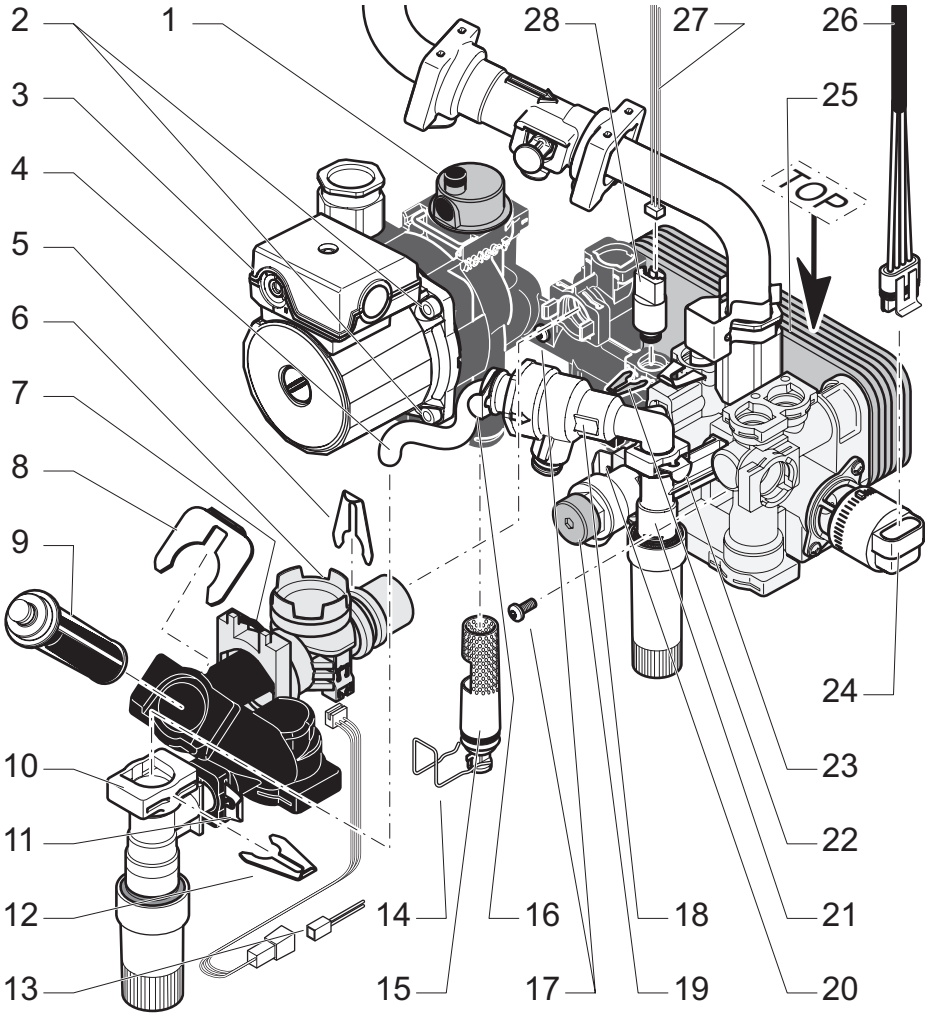

Legend

1 Automatic air vent
2 Pump retaining screw
3 Pump
4 Discharge pipe
5 Flow sensor retaining clip (*)
6 Flow sensor (*)
7 Flow sensor retaining clip (*)
8 Cold water filter retaining clip (*)
9 Cold water filter (*)
10 Filling tap (*)
11 Filling pipe retaining clip (*)
12 Filling pipe retaining clip (*)
13 Flow sensor connector (*)
14 “Foaming” filter retaining clip
15 “Foaming” filter
16 Discharge pipe retaining clip
17 DHW exchanger retaining screw (*)
18 Discharge valve
19 Heating safety valve
20 Heating safety valve retaining clip
21 Filling tap (*)
22 Heating pressure sensor retaining clip
23 Discharge retaining clip
24 Three-way valve
25 DHW exchanger (*)
26 Three-way valve connector
27 Heating pressure sensor connector
28 Heating pressure sensor

(*) Not required on SB models

14.4.1 Cold water filter

- Release the retaining clip from the filter (8).
- Remove the cold water filter (9) and clean it.

14.4.2 “Foaming” filter

- The “foaming” filter improves gas purging in the heating circuit.
- Close the heating flow and return valves, and drain the boiler.
- Release the filter retaining clip (14) located under the pump.
- Remove the “foaming” filter (15).
- Clean and replace it, correctly positioning the stud.

14.5 Combustion block

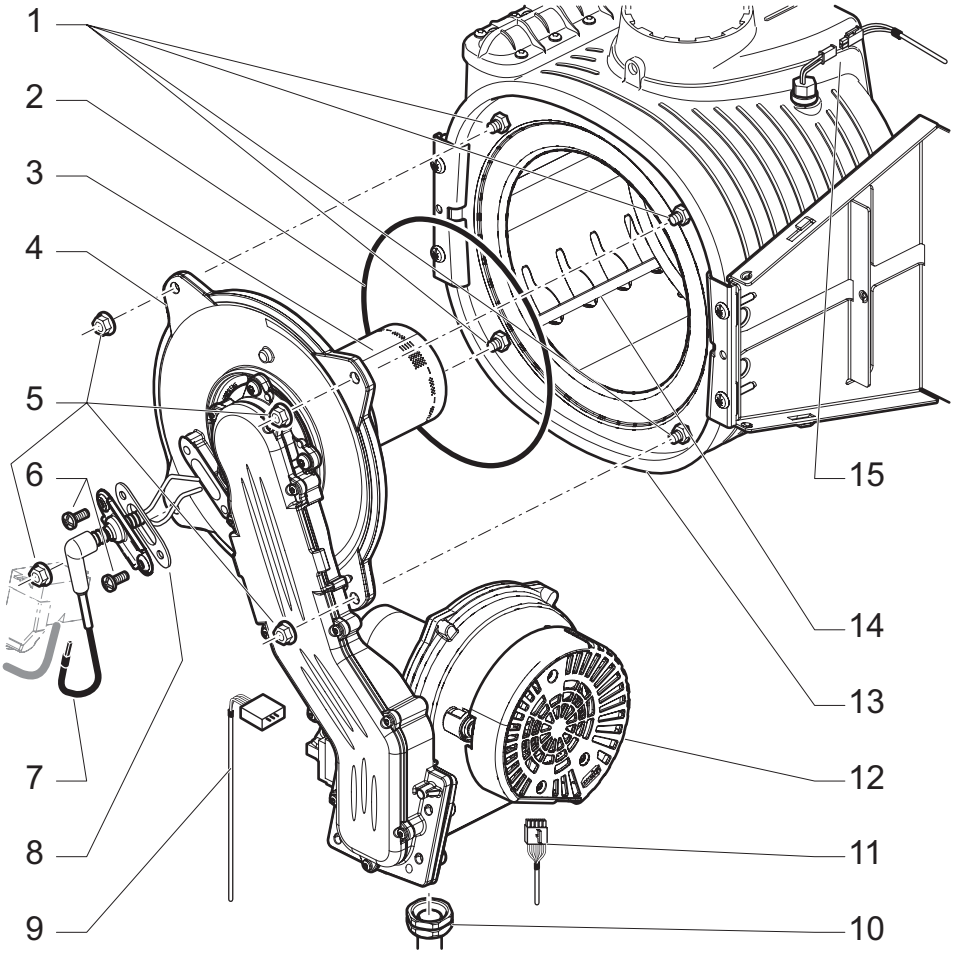

Legend

1 Burner unit retaining screws
2 Gasket
3 Burner
4 Burner unit
5 Burner unit retaining nuts
6 Ignition and control electrode retaining screw
7 Ignition and control electrode connector
8 Ignition and control electrode
9 Gas valve connector
10 Gas pipe
11 Fan connector
12 Fan
13 Heat exchanger
14 Resistance
15 Thermal fuse connector

14.5.1 Dismantling the burner unit

- Remove the silencer (see chapter on “Maintenance”).
- Disconnect the ignition and control electrode connector (7) from the ignition module.
- Remove the gas pipe (10).
- Remove the connectors from the gas valve (9) and the fan.
- Loosen the 4 nuts (5).
- Remove the burner unit (4) from the heat exchanger (13).

The screws (1) welded to the heat exchanger must not be damaged. Otherwise, replace the heat exchanger.

The sealing on the burner door on the burner unit must not be damaged. If it is, replace it.

14.5.2 Cleaning the heat exchanger

- Clean the resistance (14) in the heat exchanger (13) using ordinary vinegar.
- Rinse with a high-powered jet of water.

14.5.3 Burner verification

The burner (3) needs no maintenance or cleaning.

- Check that its surface is not damaged. If necessary, replace the burner.
- After checking or replacing the burner, assemble the burner unit (4) as described in the following chapter.

14.5.4 Assembling the burner unit

- Replace the gasket (2).
- Place the burner unit (4) on the heat exchanger (13).
- Progressively tighten the 4 nuts (5) diagonally.
- Replace the silencer.
- Connect the gas pipe (10) with a new gasket to the burner unit (4).
- Connect the ignition and control electrode connector (7) to the ignition module.
- Connect the gas valve (9) and the fan (11) connectors.
- Open the appliance’s gas inlet.
- Check for gas soundness.

15 Remplacement of parts

Warning!

- Before starting the remplacement of parts, read carefully the chapter “Safety instructions”.
- Ensure boiler is drained before replacing any hydraulic components, refer to chapter «Draining of the appliance».

15.1 Hydraulic block

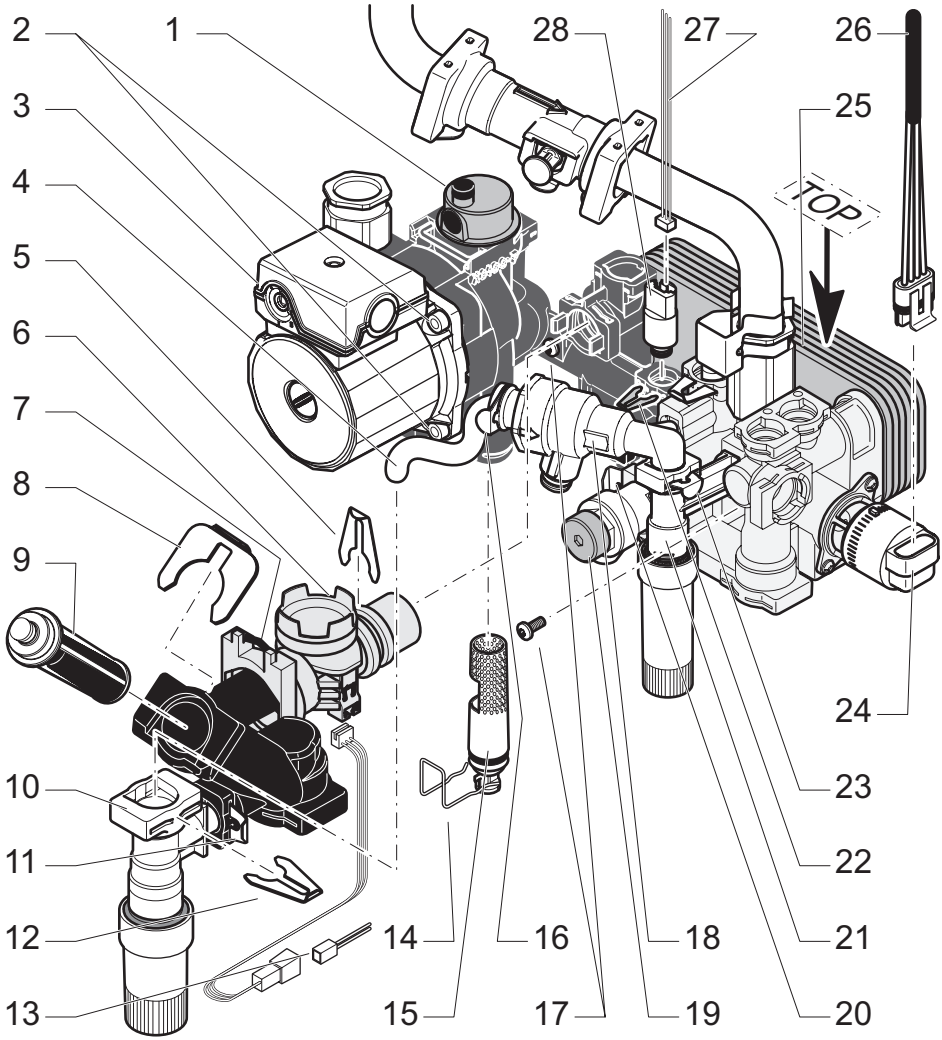

Legend

1 Automatic air vent
2 Pump retaining screw
3 Pump
4 Discharge pipe
5 Flow sensor retaining clip (*)
6 Flow sensor (*)
7 Flow sensor retaining clip (*)
8 Cold water filter retaining clip (*)
9 Cold water filter (*)
10 Filling tap (*)
11 Filling pipe retaining clip (*)
12 Filling pipe retaining clip (*)
13 Flow sensor connector (*)
14 “Foaming” filter retaining clip
15 “Foaming” filter
16 Discharge pipe retaining clip
17 DHW exchanger retaining screw (*)
18 Discharge valve
19 Heating safety valve
20 Heating safety valve retaining clip
21 Filling tap (*)
22 Heating pressure sensor retaining clip
23 Discharge retaining clip
24 Three-way valve
25 DHW exchanger (*)
26 Three-way valve connector
27 Heating pressure sensor connector
28 Heating pressure sensor

(*) Not required on SB models

15.1.1 Pump

- Unscrew the pump’s 4 retaining screws (2).
- Remove the pump motor (3).
- Fit the new pump motor by repeating the operations in reverse.

15.1.2 DHW exchanger

- Remove the two retaining screws (17) accessible from the front of the boiler.
- Remove the DHW exchanger (25).
- Fit the new DHW exchanger by repeating the operations in reverse.
- Check the assembly direction: the word “TOP” printed on the exchanger edge (25) must be positioned towards the top.

15.1.3 Flow sensor

- Remove the retaining clip from the filling pipe (12), and pivot the tap and the filling pipe.
- Disconnect the connector (13) located under the flow sensor.
- Remove the clips (5) and (7).
- Unscrew the cold water inlet joint under the boiler.
- Remove the flow sensor (6).
- Fit the new flow sensor by repeating the operations in reverse.

15.1.4 Heating pressure sensor

- Remove the retaining clip (22) from the heating pressure sensor.
- Disconnect the connector (28).
- Remove the heating pressure sensor (29).
- Fit the new heating pressure sensor by repeating the operations in reverse.

15.1.5 Heating safety valve

- Release the heating safety valve retaining clip (20).
- Remove the heating safety valve (19).
- Fit the new heating safety valve by repeating the operations in reverse.

15.1.6 Three-way valve

- Disconnect the 3-way valve connector (26).

- Remove the 3-way valve (24).
- Fit the new 3-way valve by repeating the operations in reverse.

15.1.7 Discharge valve

- Release the discharge outlet.
- Remove the clips (12), (16) and (23).
- Remove the pipe (4) from the discharge valve.
- Remove the discharge valve (18).
- Fit the new discharge valve by repeating the operations in reverse.

15.2 Combustion block

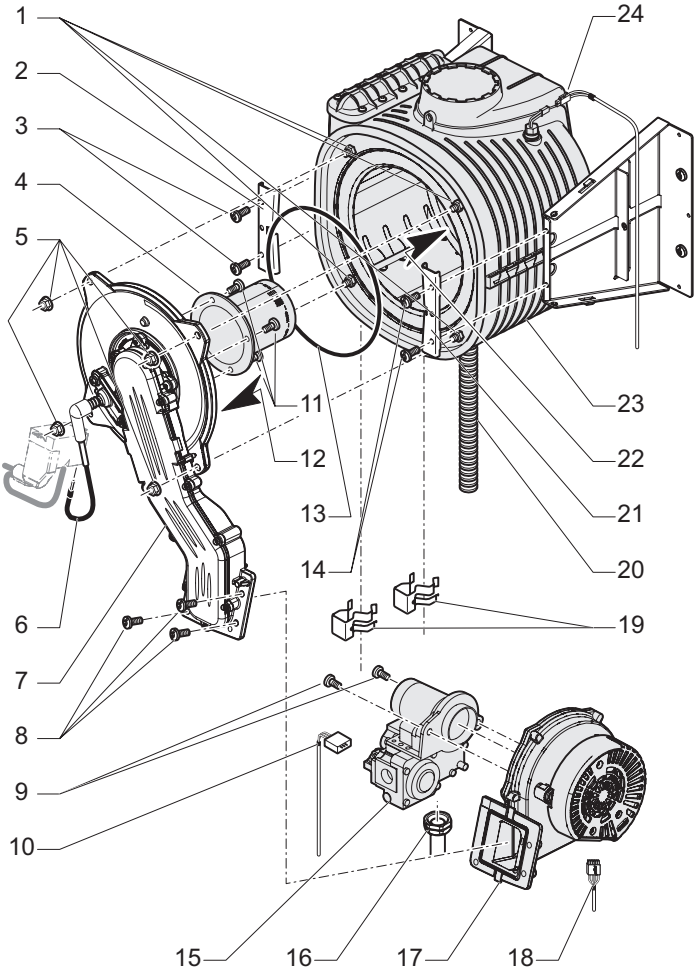

Legend

1 Heat exchanger retaining screw
2 Heat exchanger retaining plate
3 Heat exchanger retaining screw
4 Burner
5 Burner unit retaining nuts
6 Ignition and control electrode connector
7 Burner unit
8 Fan retaining screw
9 Gas valve retaining screw
10 Gas valve connector
11 Burner retaining screw
12 Insulator
13 Gasket
14 Heat exchanger retaining screw
15 Gas valve
16 Gas pipe
17 Fan
18 Fan connector
19 Heating pipes retaining clips
20 Condensate trap pipe
21 Heat exchanger retaining plate
22 Insulator
23 Heat exchanger
24 Thermal fuse connector

15.2.1 Burner unit

- Remove the 3 fan retaining screws (8).
- Remove the burner unit (7) (see chapter on “Maintenance”).
- Fit the new burner unit, the new gasket (13) and the new insulator (12) (see chapter on “Maintenance”).

15.2.2 Burner

- Remove the burner unit (7) (see chapter on “Maintenance”).
- Remove the 3 screws (11) on the burner and remove it.
- Fit the new burner and new gasket.
- Replace the burner unit (7) (see chapter on “Maintenance”).

15.2.3 Heat exchanger

- Remove the silencer (see chapter on “Maintenance»).
- Remove the burner unit (7) (see chapter on “Maintenance”).
- Remove the heat fuse connector (24).
- Remove the 2 heating pipe retaining clips (19).
- Release the heating pipe from the heat exchanger.
- Release the condensate trap pipe (20) from the heat exchanger.
- Unscrew the 4 retaining screws (3) and (14) and remove the 2 retaining plates (2) and (21) from the heat exchanger.
- Pull the heat exchanger towards you to extract it from its 2 side rails.
- Fit the new heat exchanger by repeating the operations in reverse.

15.2.4 Gas valve

- Remove the pipe (16) from the gas valve (15).
- Remove the gas valve connector (10).
- Remove the two gas valve retaining screws (9).
- Remove the gas valve (15).
- Fit the new gas valve and the new gasket by repeating the operations in reverse.

15.2.5 Fan

- Remove the gas valve (15) (see previous paragraph).
- Remove the fan connector (18).
- Loosen the 4 screws (8) located on the burner unit (7).
- Remove the fan (7).
- Screw the new fan to the burner unit (7).
- Repeat the above operations in reverse to reassemble the fan.

15.3 Expansion vessel

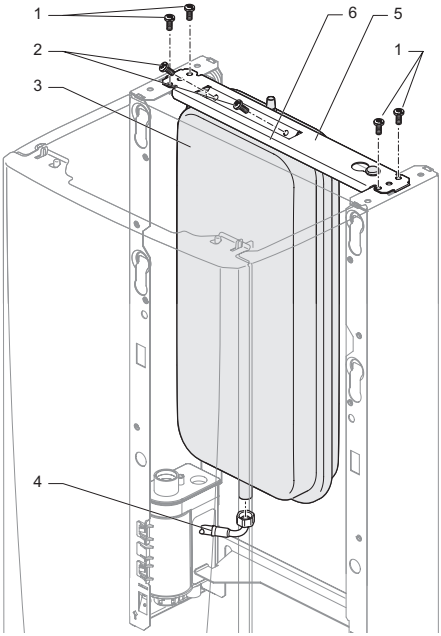

Legend

1 Hanging bracket retaining screw
2 Expansion vessel retaining screw
3 Expansion vessel
4 Expansion vessel coupling
5 Hanging bracket
6 Pressure test point

- Loosen the coupling (4) from the expansion vessel (3).
- Loosen screws (1) and (2) on the hanging bracket (5) and remove it.
- Remove the expansion vessel (3) towards the front.
- Fit the new vessel by repeating the operations in reverse.
- Check the inlet pressure at the expansion tank (see paragraph on “Technical Data”) through the pressure test point (6) and adjust if necessary.

- After fitting a new expansion vessel, fill and purge the appliance or installation if necessary.

15.4 Ignition module / Ignition and control electrode / Sight glass

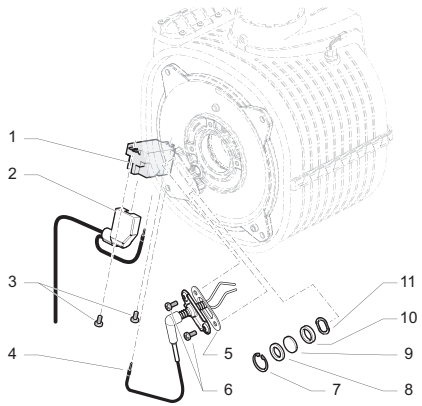

Legend

1 Ignition module
2 Ignition module harness connector
3 Ignition module retaining screw
4 Ignition and control electrode connector
5 Ignition and control electrode
6 Ignition and control electrode retaining screw
7 Circlip
8 Gasket
9 Sight glass
10 Gasket
11 Spring leaf

15.4.1 Ignition module

- Remove the ignition and control electrode connector (4) from the ignition module (1).
- Remove the ignition module harness connector (2).
- Remove the 2 ignition module (1) retaining screws (3).
- Fit the new ignition module by repeating the operations in reverse.

15.4.2 Ignition and control electrode

- Remove the ignition and control electrode connector (4) from the ignition module (1).
- Remove the 2 ignition and control electrode (5) retaining screws (6).
- Fit the new ignition and control electrode by repeating the operations in reverse.

15.4.3 Sight glass

- Remove the circlip (7).
- Remove gaskets (8) and (10), the sight glass (9) and the spring leaf (11).
- Fit the new sight glass and the new gaskets by repeating the operations in reverse.

15.5 Control panel

15.5.1 Main PCB

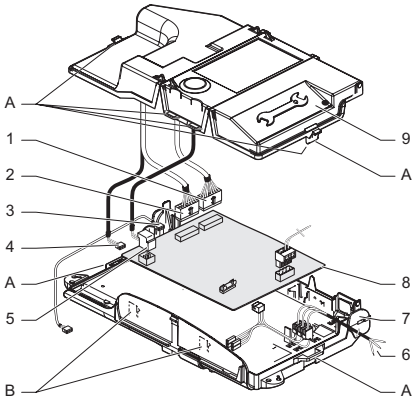

Legend

1 Hydraulic harness connector
2 Combustion harness connector
3 Main PCB harness connector
4 Ignition module harness connector
5 Pump harness connector
6 Power supply cable
7 Electrical box
8 Main PCB
9 Casing
A Casing retaining clips
B Main PCB retaining clips

- Remove the casing (9) using the retaining clips (A).
- Disconnect connectors (1) (2) (3) (4) (5) from the main PCB.
- Disconnect the power supply cable connector (6).
- Remove the main PCB (8) from the clips (B) on the electrical box (7).
- Fit the new main PCB by repeating the operations in reverse.

15.5.2 User interface PCB

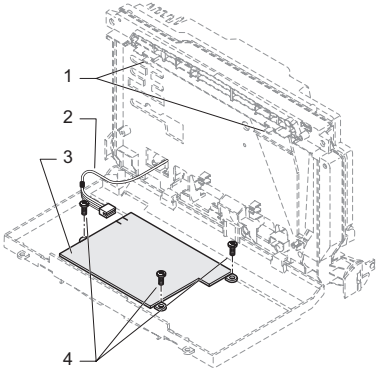

Legend

1 User interface retaining clips
2 Main PCB harness
3 User interface PCB
4 User interface retaining screws

- Push on the 2 retaining clips (1) to release the user interface.
- Disconnect the main PCB harness (2).
- Remove the user interface PCB retaining screws (4).
- Remove the user interface PCB (3).
- Fit the new user interface PCB by repeating the operations in reverse.

16 Technical data

Boiler type C13, C33, C53

Description	Unit	F 18 E SB	F 24 E	F 30 E
Gas category		II_{2H3P}		
Heating				
Heating output at 80°C/60°C (P)	kW	8.4 - 17.9		8.4 - 23.6
Efficiency calculated on net calorific value at 80/60°C	%	96 - 97.7		96 - 97.9
Heating output at 50°C/30°C (P)	kW	9.3 - 19.6		9.3 - 25.8
Efficiency calculated on net calorific value at 50/30°C	%	107		
Minimum calorific flow rate (Q min)	kW	8.7		
Maximum calorific flow rate (Q max)	kW	18.3		24.1
Heating minimum flow rate	l/h	500		
Maximum heating temperature	C°	80		
Minimum heating temperature	C°	28		
Expansion vessel, useful capacity	l	8		
Expansion tank initial pressure	bar	0.75		
Maximum system capacity at 75°C	l	160	160	160
Safety valve, maximum service pressure (PMS)	bar	3		
Domestic hot water				
Heating output (P)	kW	-	24	29.6
Minimum calorific flow rate (Q min)	kW	-	8.7	
Maximum calorific flow rate (Q max)	kW	-	24	29.6
Maximum hot water temperature	°C	-	60	
Specific flow rate (D) (ΔT 30°C)	l/min	-	11.5	14.2
Cold water flow rate regulator	l/min	-	8	12
Minimum operating pressure	bar	-	0.5	
Maximum operating pressure	bar	-	10	

Description	Unit	F 18 E SB	F 24 E	F 30 E
Combustion				
Fresh air flow rate (1013 mbar - 0°C)	m3/h	21.8	28.5	35.2
Flue outlet flow rate	g/s	7.71	10.1	12.5
Flue outlet temperature at 80°C/60°C	°C	62		63
Flue outlet temperature at 50°C/30°C	°C	42	47	49
Values of product outlet (measured on nominal heating output with G20 reference gas):				
CO	ppm	48		80
	mg/kWh	51		86
CO2	%	9.2		
NOx balance	ppm	21.6		22.5
	mg/kWh	38.1		39.7
Dimensions :				
Height	mm	742		
Width	mm	410		
Depth	mm	370		
Net weight	kg	40.5		
Supply voltage	V/Hz	230/50		
Maximum absorbed power	W	142	144	
Electrical rating	A	0.63	0.62	0.63
Fuse	A	2		
Electric protection		IPX4d		
Class		1		
CE number		1312 BQ 4207		

Technical data depending on the gas type	Unit	F 18 E SB	F 24 E	F 30 E
Natural gas G 20 (1)				
DHW flow rate at maximum input	m^3/h	-	2.540	3.132
Heating flow rate at maximum input	m^3/h	1.937		2.550
Flow rate at minimum input	m^3/h	0.921		
Inlet pressure	mbar	20		

(1) 15 °C, 1013,25 mbar

0020009247-02 06/05

Saunier Duval, Nottingham Road
Belper,Derbyshire
DE56 1JT
Tel. 00 44 (0)1773 525914
Fax. 00 44 (0)1773 828070
www.saunier-duval.co.uk

Saunier Duval